CODE	DESCRIPTION	POS.	GR.
273097A	ADHESIVE LABEL	1	G0281A
281420A90	FRONT BONNET	1	G0281A
281424A90	FRONT GRILL	2	
592295A90	DISCHARGE AIR GRILLE	3	
592948A90	CONTROL PANEL ASSEMBLY/ELECTRONICS	4	
272100A	EVAP AIR VOLUTE	5	
272104A	RIGHT-LEFT INSULATOR	8	
272105A	COMPRESSOR FRONT INSULATOR	9	
256701A	EVAPORATOR PROBE	10	
256706A	EVAP PROBE CABLE	11	
214161A86	BACK SUPERIOR PROTECTION	15	
315928A86	RIGHT-LEFT PROTECTION	16	
276141A	D4E146 CENTRIFUGAL FAN	17	
276243A	FOUR WAYS VALVE	18	
281549A	DRAIN PIPE	19	
281505A	DISCHARGE PIPE	20	
276042A	DRAIN PIPE	21	
275998A	MICROSWITCH 83161.527	22	
281149A	FLOATING	23	
281193A	FLOATING	24	
281460A72	TANK I.U.	25	
281344A72	MICROSWITCH HOLDER	26	
276073A	COIL	27	
242528A	COMPRESSOR WASHER NUT	28	G0140A
276286A	GJ176PAB GOLD COMPRESSOR	28	G0140A
277583A	TERMINAL COVER	28	G0104A
277584A	TERMINAL COVER GASKET	28	G0140A
272157A	COMPRESSOR INSULATOR	29	
592501A90	WINDOW SUCTION CUP	30	
281270A72	QC VICE	31	
276108A	MF 35 CAPACITOR	32	
281507A	ROTARY COMPRESSOR VIBRATION-DAMPING	33	
279306A	FORWARD WHEEL	34	
281381A91	BACK WHEEL	35	
281488B84	DOWN BASE I.U.	36	
255546A70	POWER CABLE	37	
256039A	3/8" QUICK CONNECTOR (MALE)	38	
598876A	FEMALE QUICK CONNECTOR ASSEMBLY	39	
275958A	3 POLES TERMINAL BOARD (PA 244/CB30	40	
275977A	CAPACITOR 3,15 mF	41	
276532A	MF1,5 CAPACITOR	42	
276244AL	COIL	43	
275909A	SWITCH BUTTON	44	
255619A	MAIN CABLE	45	
256462A	EVAPORATING COIL	46	
592235A85	BACK GRILL ASSEMBLY/FILTER	47	
281330A85	QUICK CONNECTOR BACK	48	
281334A85	BACK DOOR	49	
598606A86	FLEXIBLE LINE ASSEMBLY	50	
256464A	CONDENSER COIL	51	
281200B85	BASE O.U.	52	
281655A85	BACK COMPONENT O.U.	53	
281288B85	FRONT COMPONENT O.U.	54	
281201A85	LEFT-RIGHT SIDE O.U.	55	
281289B85	UPPER COMPONENT O.U.	56	
281283A85	OUTDOOR UNIT HANDLE	57	
275904A	A4E360-AF28-12 AXIAL FAN	58	
241550A	AXIAL FAN BACK GRILL	59	
281557A85	FLEXIBLE LINE COUPLING	60	
598877A	LIQUID PIPE ASSEMBLY/ VALVE O.U.	61	
276082B	REMOTE CONTROL	63	
276088A	ANTIJAMMING FILTER	64	
281455A72	PIPE UNION	65	

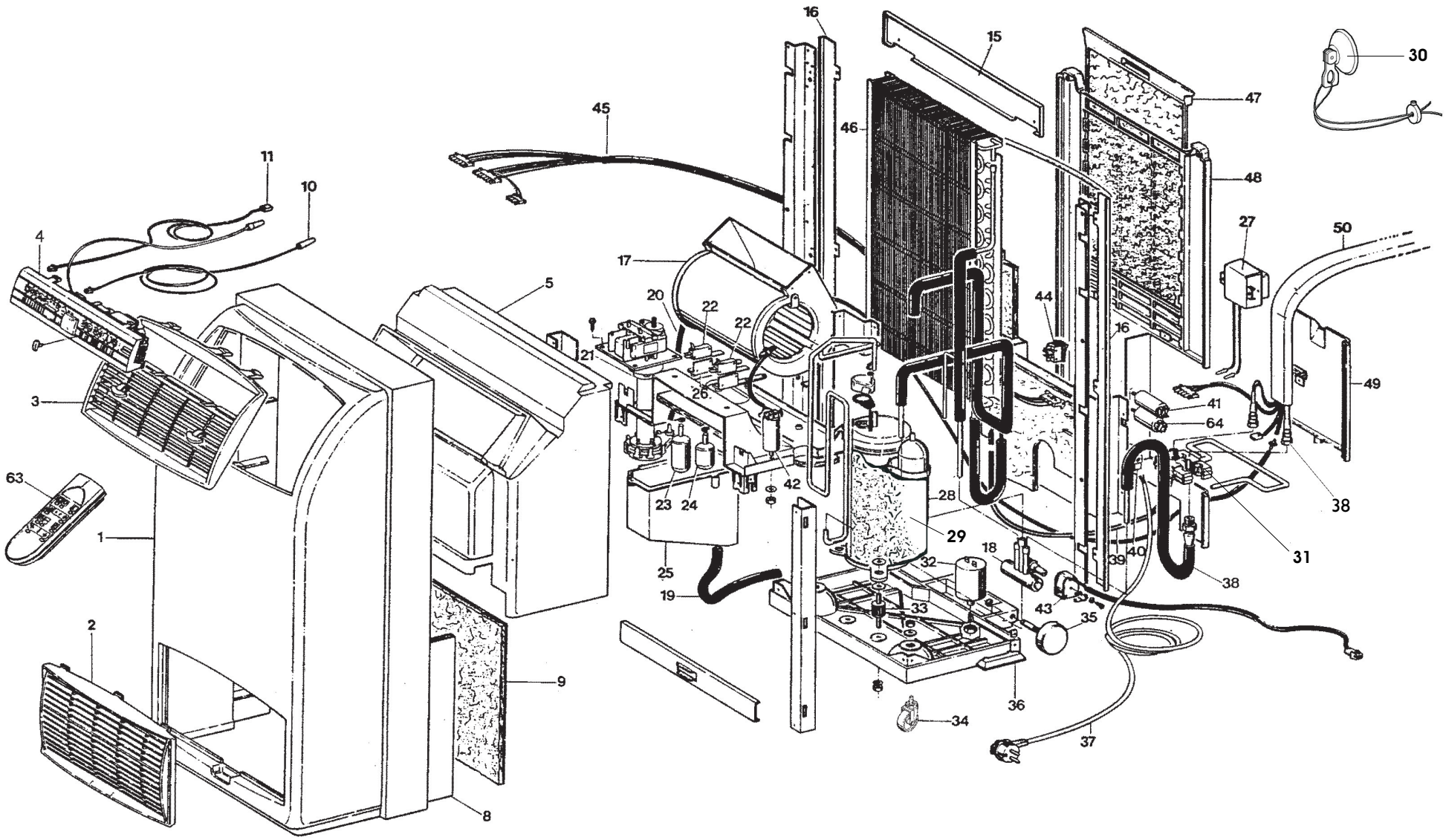

OLIMPIA SPLENDID Via G. Rossa 1-3 Gualtieri (R.E.)

Unità interna

CLIMA 16 HP HE

Agg. Agosto 2005 - RIF: 052.01

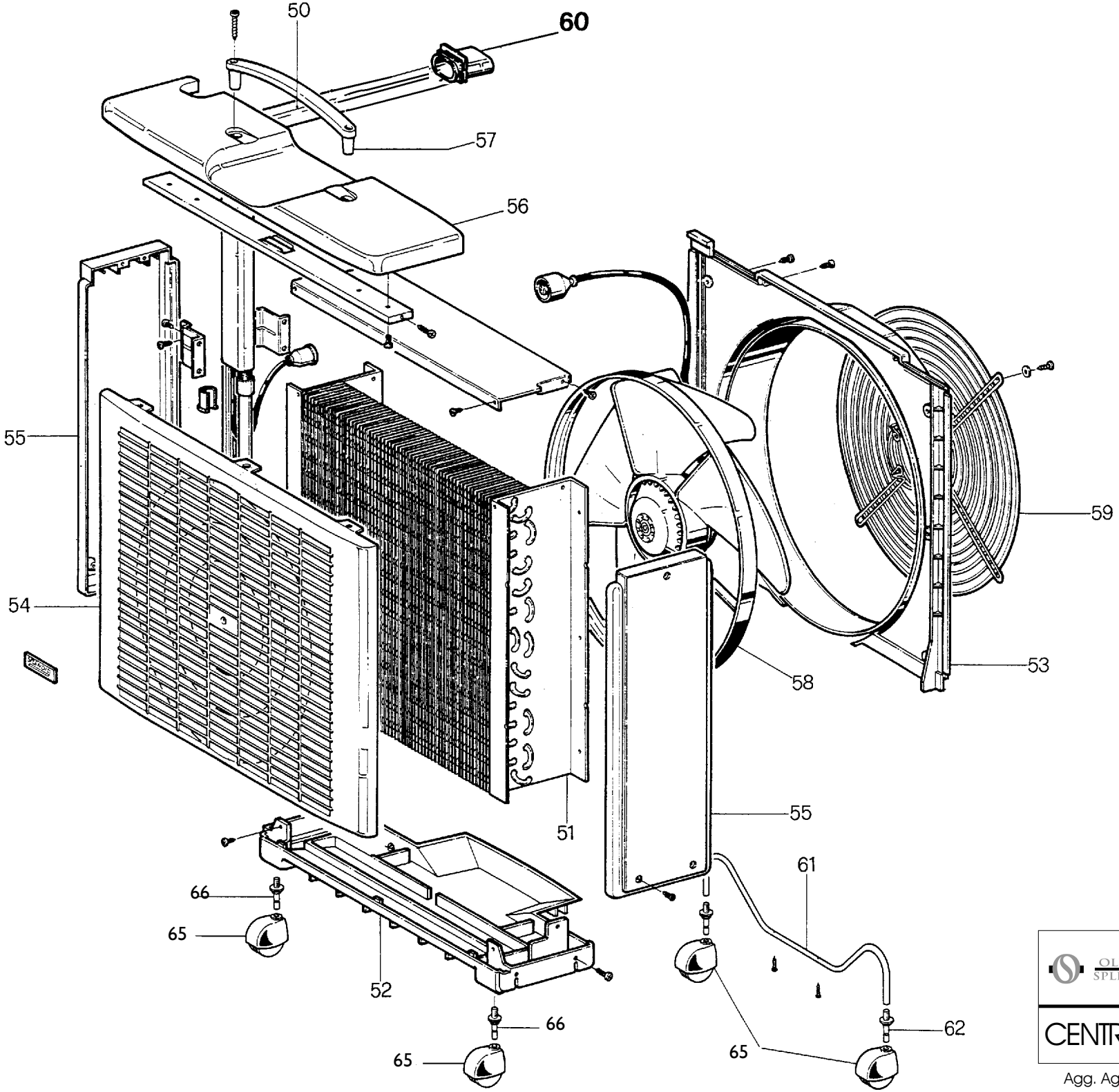

OLIMPIA SPLENDID
Via G. Rossa 1-3
Gualtieri (R.E.)

CENTRALCLIMA - U.E.

Agg. Agosto 2005- RIF: 006.02